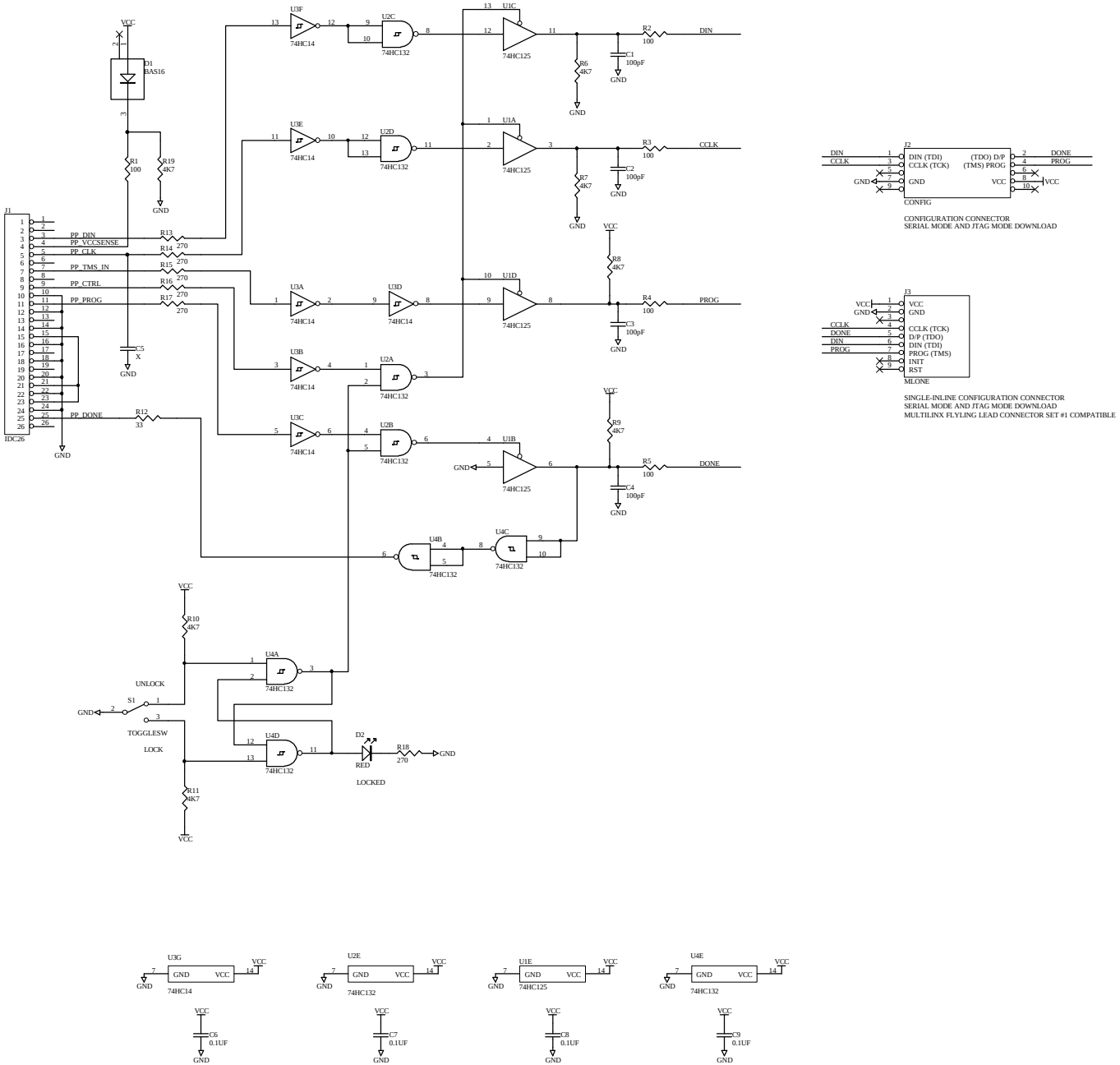

CONFIGURATION CONNECTOR
SERIAL MODE AND JTAG MODE DOWNLOAD

SINGLE-INLINE CONFIGURATION CONNECTOR
SERIAL MODE AND JTAG MODE DOWNLOAD
MULTILINX FLYLING LEAD CONNECTOR SET #1 COMPATIBLE

B5-XILINX-DOWNLOAD
Version: 1.0
www.BurchED.com.au, Copyright 2001